TRT MADE POSSIBLE

REAR BOLSTER ASSY
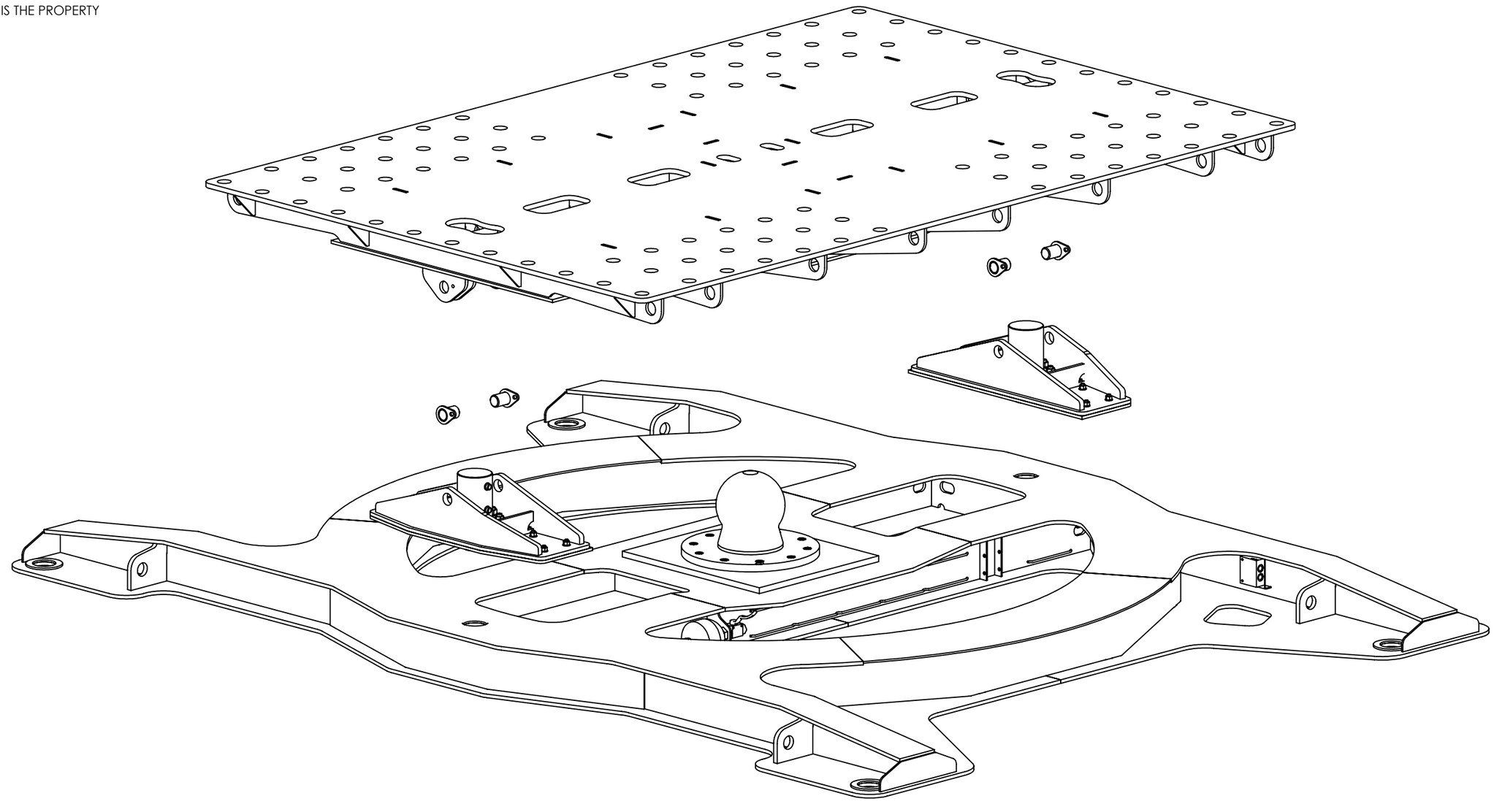
THIS DRAWING IS COPYRIGHT AND IS THE PROPERTY
OF TIDD ROSS TODD LTD.